1:1 SCALE

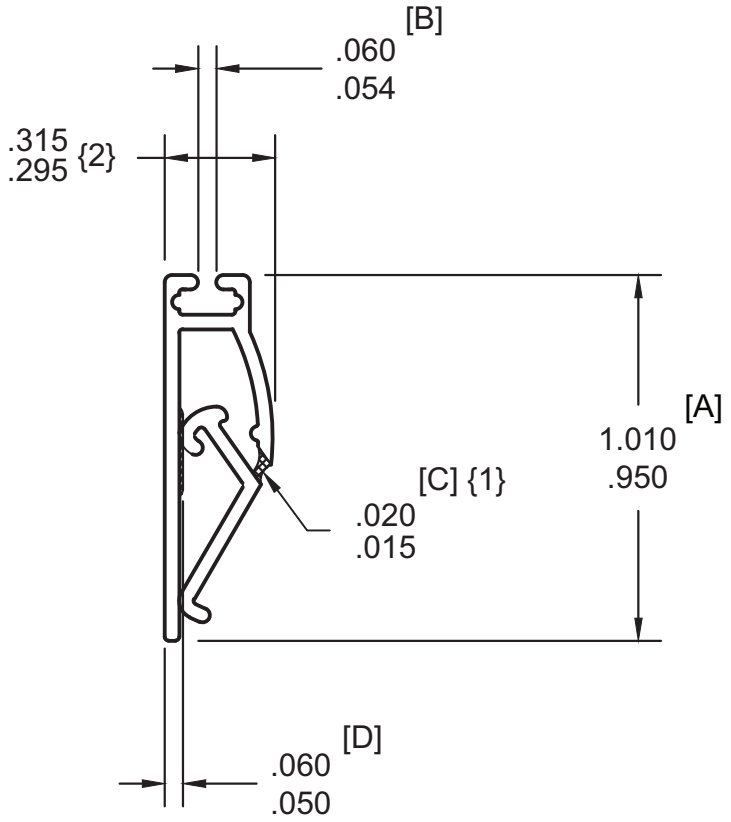

{2} MEASURE WITH THE HINGE CLOSED

{1} DIM. APPLIES TO HINGE AT THINNEST POINT

[E]
WALL = .040

REV.	DESCRIPTION	MODIFIED BY	DATE
A	THIS EP# IS FOR NAT PVC.	SBP	09/23/10

popco inc.
MINNETONKA, MN

SNAPPING BANNERAIL II

SCALE	PART NO.	SIZE
2:1		A

DRAWN	APPROVED	DATE	DRAWING NO.	REV
SBP		09/23/10	EP2613	A