1:1 SCALE

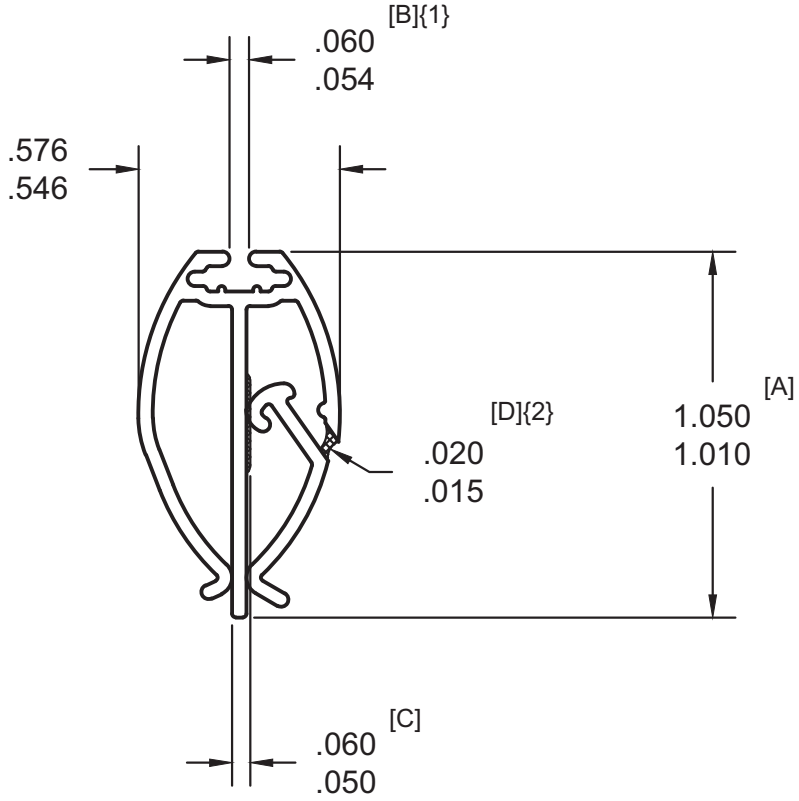

{1} MEASURE [B] WITH PART OPEN
{2} MEASURE HINGE AT THINNEST POINT

WALL = .040

REV.	DESCRIPTION	MODIFIED BY	DATE
A	DIM [A] WAS 1.035/1.010	SBP	07/26/12

popco inc.
MINNETONKA, MN

NX SNAP RAIL

SCALE	PART NO.	SIZE
2:1		A

DRAWN	APPROVED	DATE	DRAWING NO.	REV
SBP		07/26/12	EP2242	A