1:1 SCALE

TO HOLD 1/8" - 3/16" STOCK

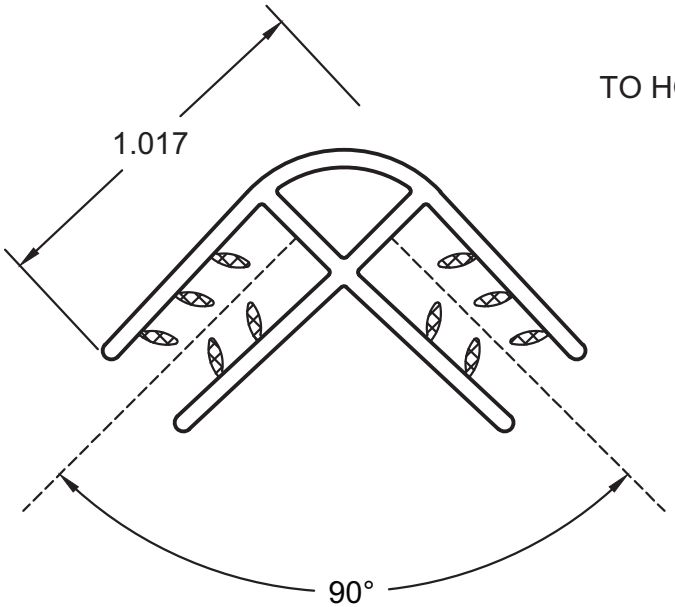

WALL = .050

REV.	DESCRIPTION	MODIFIED BY	DATE

popco inc.
MINNETONKA, MN

1/8" - 3/16" 90° CORNER

SCALE	PART NO.	SIZE
2:1		A

DRAWN	APPROVED	DATE	DRAWING NO.	REV
SBP		07/27/20	EP3013	